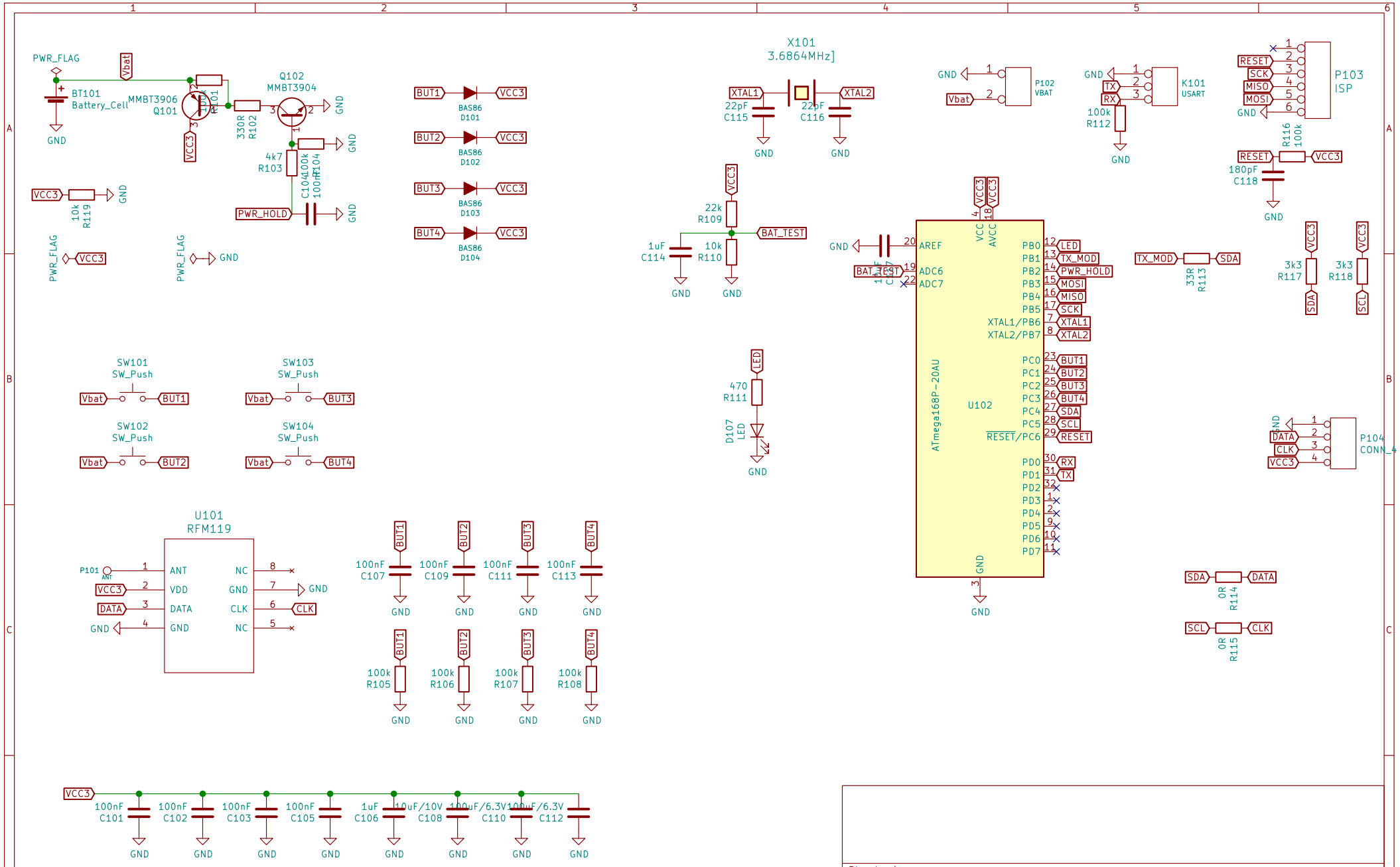

Sheet: /
File: remote868.sch

Title: Remote control 868MHz (c) Jiri@Pittnerovi.com

Size: A4	Date: 2019	Rev: 1.0
KiCad E.D.A. kicad 5.1.5		Id: 1/1