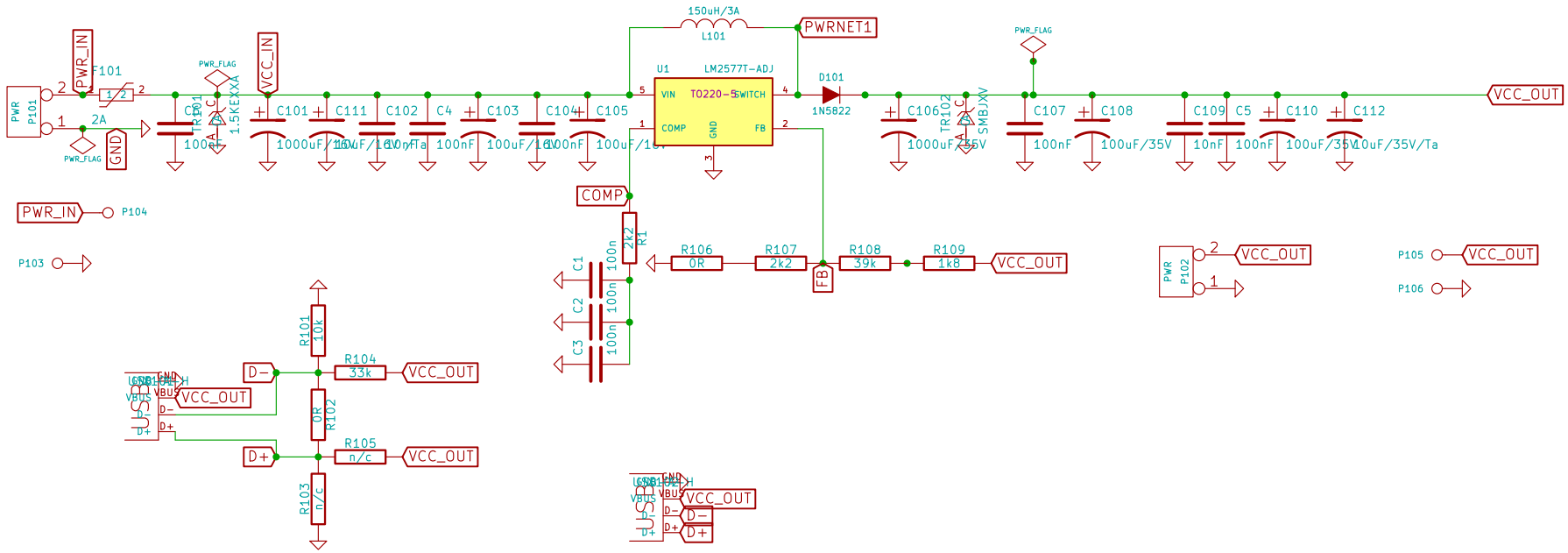

File: dcdc_up.sch		
Sheet: /		
Title:		
Size: A4	Date: 14 sep 2017	Rev:
KiCad E.D.A.		Id: 1/1